CAUTION-ELECTRICALLY OPERATED PRODUCT:
NOT RECOMMENDED FOR CHILDREN UNDER 8 YEARS OF AGE. AS WITH ALL ELECTRIC PRODUCTS, PRECAUTIONS SHOULD BE OBSERVED DURING HANDLING AND USE TO PREVENT ELECTRIC SHOCK. INPUT: 120V AC 60Hz 10W. OUTPUT: 12.8V DC 500mA.

NEW BRIGHT®

OWNER'S MANUAL

Please read and understand all precautions prior to use.

Thank you for choosing a premium New Bright product.

JN182-19

Table of Contents

Section 1: Table of Contents

Section 2: Component Checklist

Section 3: Charging the Battery

Section 4: Battery Installation in Vehicle

Section 5: Vehicle Features and Functions

Section 6: Transmitter Battery Installation

Section 7: Transmitter Features and Functions

Section 8: Proper Use
Precautions and Care

Section 9: Trouble Shooting

Section 10: Cautions

Section 11: Warranty Information

Component Checklist

- Vehicle
- Battery Charger
- 12.8V Lithium Ion Battery Pack
- Transmitter
- (2) “AA” Batteries

3 Charging the Battery

IMPORTANT!
The included 12.8V Lithium Ion battery pack is only PARTIALLY CHARGED prior to shipment and it is recommended the battery be fully charged before first use.

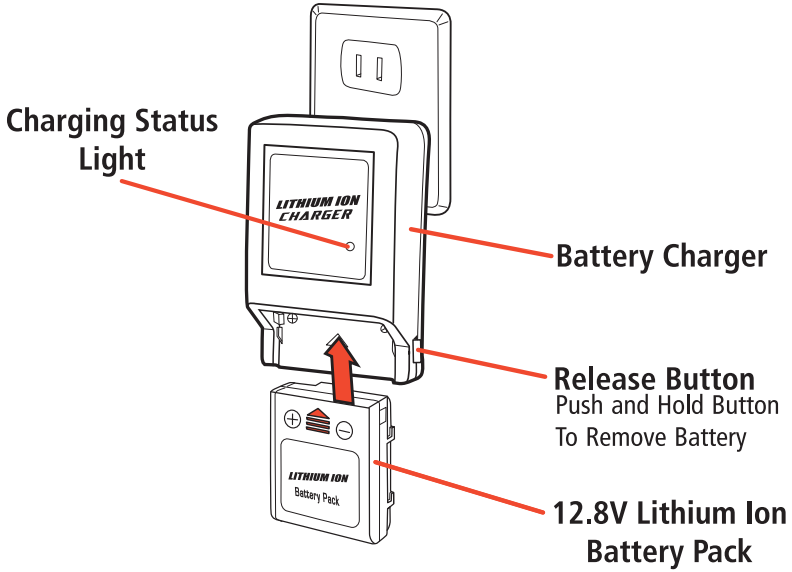

1. Plug the Charger into a standard indoor electrical outlet. This power unit is intended to be correctly orientated in a vertical or wall mount position.
2. Insert the 12.8V rechargeable battery pack securely into the charger (as shown above). Be sure the arrows are properly matched.
3. Charging Status Light will be solid red while battery is charging. When charging is complete, light will blink green.
4. Charge will last approximately 10-12 minutes depending on terrain and driving style.

IMPORTANT: It is normal for the battery pack to become warm after charging and/or use. Be sure to allow the battery pack to cool before using or recharging. Recharging a warm battery pack will greatly reduce the battery life.

ATTENTION PARENTS:

- The Battery Charger & Battery Pack need to be periodically examined for potential hazards. Any potentially hazardous parts need to be repaired or replaced.

4

Battery Installation

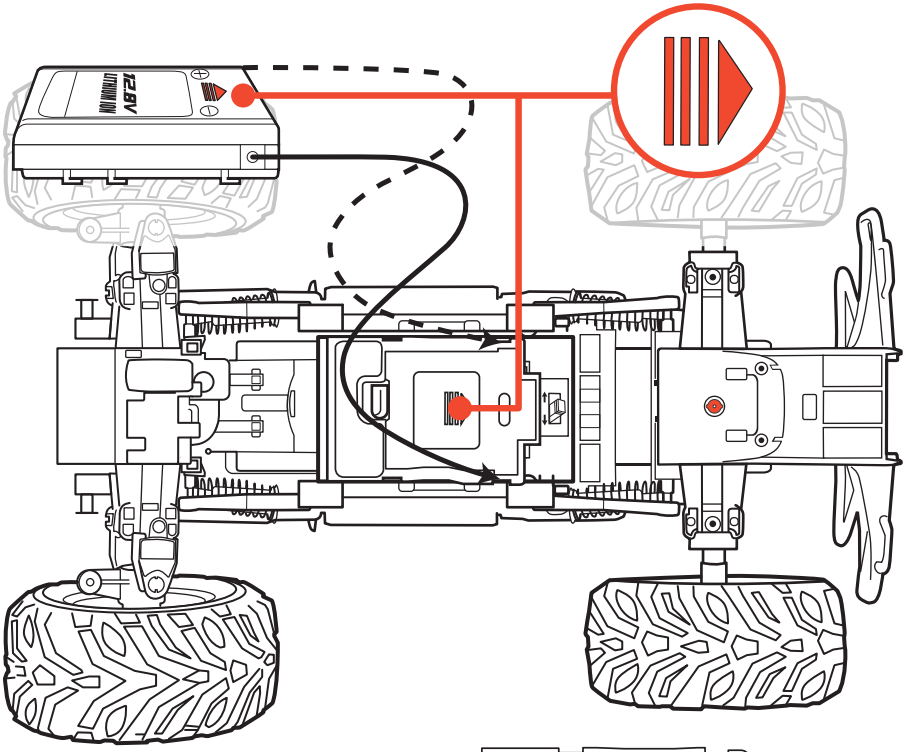

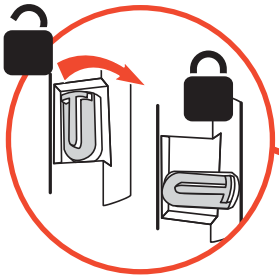

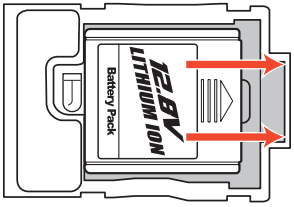

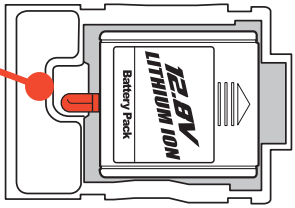

5

Features and Functions

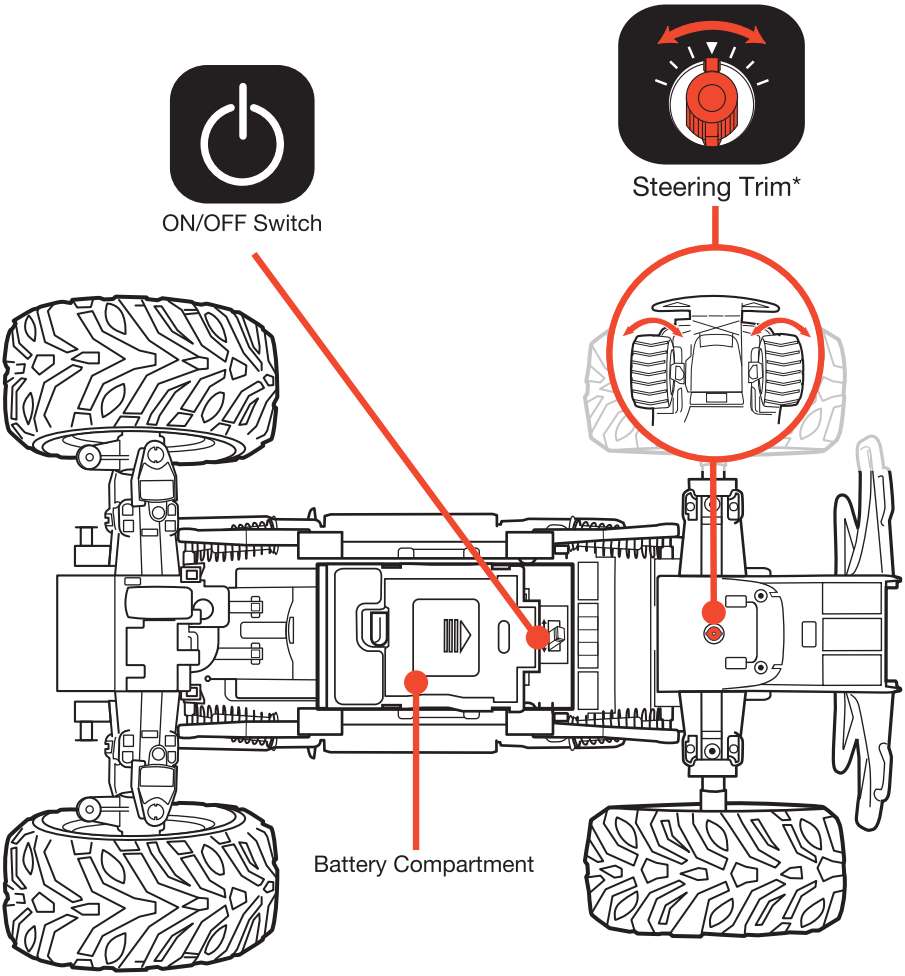

* If vehicle pulls to the left or right during forward driving the Steering Trim may need to be adjusted. The Steering Trim is located on bottom of chassis between the front wheels.

6

Battery Installation

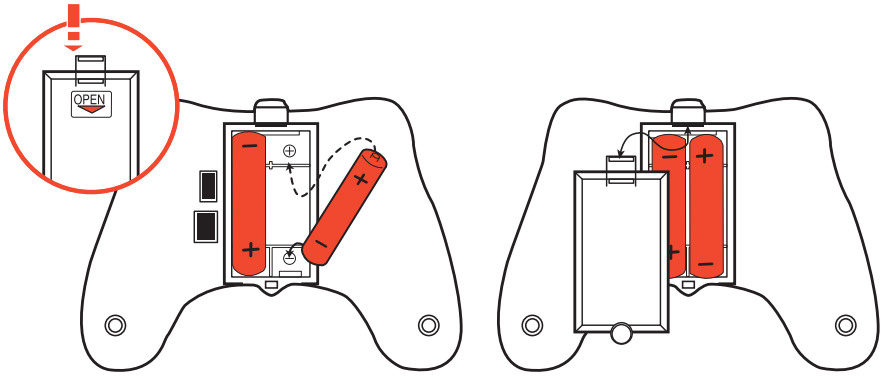

1. Locate the Transmitter Battery Compartment, which is on the back of the Transmitter.

2. Move the Battery Compartment Lock towards the Battery Compartment and remove the Battery Compartment Cover.

3. Insert 2 “AA” batteries. Make certain the plus (+) and minus (–) markings on the batteries are in the same position as the plus (+) and minus (–) markings inside the Battery Compartment.

4. Replace Battery Compartment Cover making certain that the Battery Compartment Lock has “snapped” into the locked position.

Note: When replacing batteries:
Use alkaline batteries only.
Do not mix old and new batteries.
Do not mix alkaline, standard or rechargeable batteries.

Features and Functions

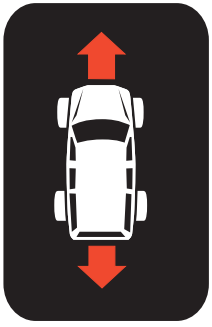

Forward/Reverse
Drive

Left/Right
Steering

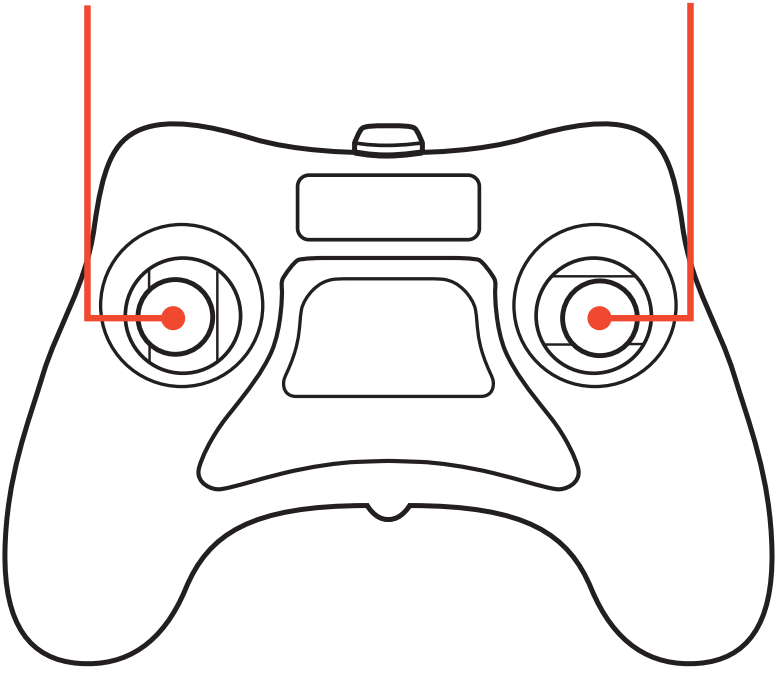

This transmitter is equipped with 2.4GHz technology which allows up to 6 vehicles to be raced at the same time.

The transmitter will automatically sync with the vehicle.

Precautions and Care

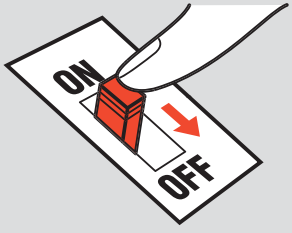

Switch vehicle OFF when not in use.

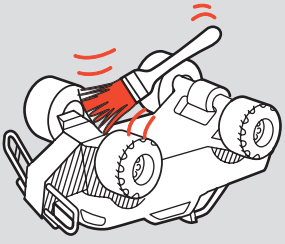

Brush areas where dirt gets trapped.

Wipe body with a soft rag or cloth.

Do not use chemicals or water to clean

Trouble Shooting

90% of all difficulties experienced with radio controlled vehicles are due to either weak batteries or batteries that have been installed incorrectly. When batteries become weak, the vehicle may not necessarily stop completely but may exhibit slow response, slow speed or erratic behavior.

Problem – Vehicle does not move or moves slowly.

- Make certain there are fresh alkaline batteries in the transmitter and that they have been installed in the correct position.
- Are the (+) and (–) markings on the alkaline batteries in the same position as the (+) and (–) markings in the Transmitter Battery Compartment?
- Has the Battery Pack been installed in the vehicle?
- Has the rechargeable Battery Pack been fully charged?
- Are the (+) and (–) markings on the Battery Pack in the same position as the (+) and (–) markings in the Battery Compartment?
- Are the metal contact tabs touching, rusty or dirty in the transmitter?
- Make certain that the vehicle ON/OFF switch is in the “ON” position.

Problem – Vehicle moves by itself or exhibits reduced range from the transmitter.

- Make certain there is no outside radio interference in your area. The best way to test this is to take the vehicle as far away from radio towers, electrical lines or tall buildings as possible to ensure no further radio interference will occur.

Cautions

Do not recharge Battery Pack if it is hot or warm to the touch. Allow Battery Pack to cool before recharging. Recharging a hot or warm Battery Pack will shorten the life of the Pack.

Do not recharge a Battery Pack if it appears to be damaged or leaking.

Always unplug Charger when not in use.

Always remove Battery Pack from Battery Compartment when not in use.

Do not dispose batteries in fire. Leakage, explosion and personal injury may occur.

Dispose of Rechargeable Battery Pack properly.

Do not attempt to disassemble Battery Pack or Charger.

Do not use Battery Charger for any use other than instructed in this booklet.

Only an adult should charge Batteries.

Do not attempt jumps or tricks with this vehicle.

NOTE: This equipment has been tested and found to comply with the limits for a Class B digital device, pursuant to Part 15 of the FCC Rules. These limits are designed to provide reasonable protection against harmful interference in a residential installation. This equipment generates, uses and can radiate radio frequency energy and, if not installed and used in accordance with the instructions, may cause harmful interference to radio communications. However, there is no guarantee that interference will not occur in a particular installation. If this equipment does cause harmful interference to radio or television reception, which can be determined by turning the equipment off and on, the user is encouraged to try to correct the interference by one or more of the following measures:

- Reorient or relocate the receiving antenna.
- Increase the separation between the equipment and receiver.
- Connect the equipment into an outlet on a circuit different from that to which the receiver is connected.
- Consult the dealer or an experienced radio/TV technician for help.

FCC CAUTION:

Changes or modifications not expressly approved by the party responsible for compliance could void the user's authority to operate the equipment.

Warranty Information

USA & Canada
30-Day Limited Warranty

New Bright Industries warrants to the original purchaser that this product will be free of defects in materials and workmanship for thirty (30) days from the date of purchase. In the event of such defect within the warranty period, New Bright will repair or replace the product at our sole discretion. This warranty does not cover damage resulting from unauthorized modifications, accident, misuse or abuse.

Should your item have a defect covered under this warranty, first call the toll free number listed below. Most problems can be resolved in this manner. If necessary, you will be issued a Return Authorization number (RA) and instructions on how to obtain a Product Return Form. The Product Return Form is to be used when returning a product to us (postage pre-paid and insured by the consumer).

When returning a defective product, please package the product, the Product Return Form and a copy of the dated sales receipt as proof of purchase. Be sure to mark the RA number on the Product Return Form. If the product is returned without a dated sales receipt, it will be excluded from coverage under this warranty. Please allow 4 to 6 weeks for delivery of repaired or replacement vehicles (depending on your location).

New Bright Industries' liability for defects in materials and workmanship under this warranty shall be limited to repair or replacement at our sole discretion. In no event shall we be responsible for incidental, consequential or contingent damages (except in those states that do not allow this exclusion or limitation).

Valid only in the USA & Canada.

Contact New Bright Industries Customer Service Toll Free at:
1-877-NBI-TOYS
(1-877-624-8697)
Monday through Friday, 8:00 AM to 5:00 PM Eastern Time